BELIMO

Technical data sheet SM24A-S

Damper actuator for adjusting dampers in technical building installations

- **Air damper size up to approx. 4 m²**
- **Nominal torque 20 Nm**
- **Nominal voltage AC/DC 24 V**
- **Control Open-close, 3-point**
- **With integrated auxiliary switch**

Technical data

Electrical data	Nominal voltage	AC/DC 24 V
	Nominal voltage frequency	50/60 Hz
	Nominal voltage range	AC 19.2...28.8 V / DC 19.2...28.8 V
	Power consumption in operation	2 W
	Power consumption in rest position	0.2 W
	Power consumption for wire sizing	4 VA
	Auxiliary switch	1 x SPDT, 0...100%
	Switching capacity auxiliary switch	1 mA...3 (0.5 inductive) A, AC 250 V
	Connection supply / control	Cable 1 m, 3 x 0.75 mm²
	Connection auxiliary switch	Cable 1 m, 3 x 0.75 mm²
	Parallel operation	Yes (note the performance data)
Functional data	Torque motor	Min. 20 Nm
	Direction of motion motor	Selectable with switch 0 (ccw rotation) / 1 (cw rotation)
	Manual override	Gear disengagement with push-button, can be locked
	Angle of rotation	Max. 95°
	Angle of rotation note	can be limited on both sides with adjustable mechanical end stops
	Running time motor	150 s / 90°
	Sound power level motor	45 dB(A)
	Spindle driver	Universal spindle clamp reversible 10...20 mm
	Position indication	Mechanically, pluggable
Safety	Protection class IEC/EN	II Protective insulated
	Protection class UL	II Protective insulated
	Protection class auxiliary switch IEC/EN	II Protective insulated
	Degree of protection IEC/EN	IP54
	Degree of protection NEMA/UL	NEMA 2, UL Enclosure Type 2
	EMC	CE according to 2004/108/EC
	Low voltage directive	CE according to 2006/95/EC
	Certification IEC/EN	IEC/EN 60730-1 and IEC/EN 60730-2-14
	Certification UL	cULus according to UL 60730-1A, UL 60730-2-14 and CAN/CSA E60730-1:02
	Mode of operation	Type 1.B
	Rated impulse voltage supply / control	0.8 kV
	Rated impulse voltage auxiliary switch	2.5 kV
	Control pollution degree	3
	Ambient temperature	-30...50°C
	Non-operating temperature	-40...80°C
	Ambient humidity	95% r.h., non-condensing
	Maintenance	Maintenance-free
Weight	Weight approx.	1.2 kg

Safety notes

- The device must not be used outside the specified field of application, especially not in aircraft or in any other airborne means of transport.

Safety notes

- Outdoor application: only possible in case that no (sea)water, snow, ice, insolation or aggressive gases interfere directly with the actuator and that is ensured that the ambient conditions remain at any time within the thresholds according to the data sheet.
- Only authorised specialists may carry out installation. All applicable legal or institutional installation regulations must be complied during installation.
- The device may only be opened at the manufacturer's site. It does not contain any parts that can be replaced or repaired by the user.
- Cables must not be removed from the device.
- To calculate the torque required, the specifications supplied by the damper manufacturers concerning the cross-section, the design, the installation site and the ventilation conditions must be observed.
- The device contains electrical and electronic components and must not be disposed of as household refuse. All locally valid regulations and requirements must be observed.

Product features

Simple direct mounting Simple direct mounting on the damper spindle with an universal spindle clamp, supplied with an anti-rotation device to prevent the actuator from rotating.

Manual override Manual override with push-button possible (the gear is disengaged for as long as the button is pressed or remains locked).

High functional reliability The actuator is overload protected, requires no limit switches and automatically stops when the end stop is reached.

Adjustable angle of rotation Adjustable angle of rotation with mechanical end stops.

Flexible signalization With adjustable auxiliary switch (0 ... 100%)

Accessories

Electrical accessories

Description	Type
Auxiliary switch, add-on, 1 x SPDT	S1A
Auxiliary switch, add-on, 2 x SPDT	S2A
Auxiliary switch, add-on, 2 x SPDT, grey	S2A GR
Feedback potentiometer 140 Ohm, add-on	P140A
Feedback potentiometer 140 Ohm, add-on, grey	P140A GR
Feedback potentiometer 200 Ohm, add-on	P200A
Feedback potentiometer 500 Ohm, add-on	P500A
Feedback potentiometer 500 Ohm, add-on, grey	P500A GR
Feedback potentiometer 1 kOhm, add-on	P1000A
Feedback potentiometer 2.8 kOhm, add-on	P2800A
Feedback potentiometer 2.8 kOhm, add-on, grey	P2800A GR
Feedback potentiometer 1 kOhm, add-on, grey	P1000A GR
Feedback potentiometer 5 kOhm, add-on	P5000A
Feedback potentiometer 5 kOhm, add-on, grey	P5000A GR
Feedback potentiometer 10 kOhm, add-on	P10000A
Feedback potentiometer 10 kOhm, add-on, grey	P10000A GR

Mechanical accessories

Description	Type
Actuator arm, for standard spindle clamp (reversible) K-SA	AH-20
Actuator arm, for one-sided spindle clamp K-ENSA	AH-25
Shaft extension 250 mm for CrNi (INOX)	AV12-25-I
Shaft extension 250 mm, for damper spindles Ø 8...25 mm	AV8-25
Straight ball joint with M8, suitable for damper crank arms KH8	KG10A
Angled ball joint with M8, suitable for damper crank arms KH8	KG8
Damper crank arm, for damper spindles	KH8
Spindle clamp, one side for NM..A, SM..A	K-ENSA
Spindle clamp, one side for SM..A	K-ENSA-I
Spindle clamp, reversible for SM..A and NMQ..	K-SA

Accessories

Description	Type
Universal mounting bracket 180 mm	Z-ARS180
Universal mounting bracket 230 mm	Z-ARS230
Angle of rotation limiter, for K-NA	20334-00001
Form fit insert 10x10 mm, for NM..A / SM..A	ZF10-NSA
Form fit insert 12x12 mm, for NM..A / SM..A	ZF12-NSA
Form fit insert 15x15 mm	ZF15-NSA
Form fit insert 16x16 mm, for NM..A / SM..A	ZF16-NSA
Mounting kit for linkage operation, SM..A for flat installation	ZG-SMA
Position indication for LM..A, NM..A, SM..A, GM..A	Z-PI
Base plate extension from SM..A to SM../AM../SMD24R	Z-SMA

Electrical installation

Notes

- Connection via safety isolating transformer.
- Parallel connection of other actuators possible. Observe the performance data.

Wiring diagrams

AC/DC 24 V, open-close

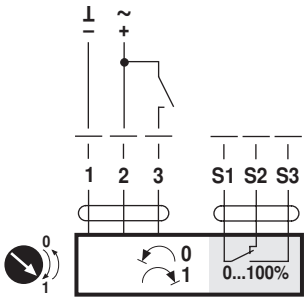

Cable colours:
1 = black
2 = red
3 = white
S1 = violet
S2 = red
S3 = white

AC/DC 24 V, 3-point

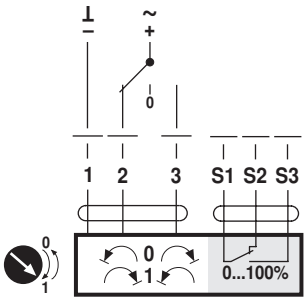

Cable colours:
1 = black
2 = red
3 = white
S1 = violet
S2 = red
S3 = white

Operating controls and indicators

Auxiliary switch settings

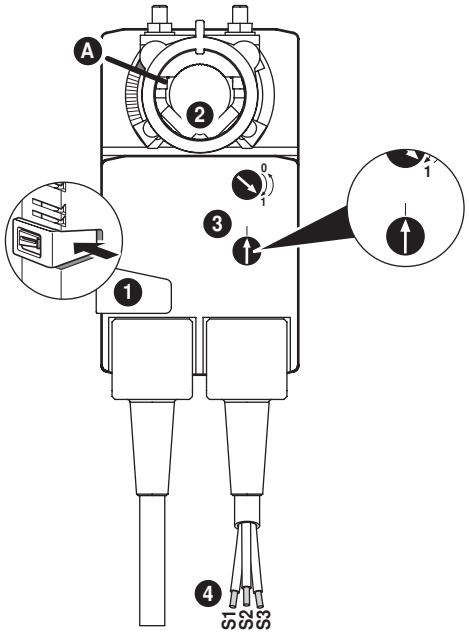

Note Perform settings on the actuator only in deenergised state.

1 Gear disengagement
Holding button pressed down: Gear is disengaged.
Manual override is possible.

2 Spindle clamp
Turn until edge line A displays the desired switching position of the actuator and release button 1.

3 Auxiliary switch
Turn rotary knob until the arrow points to the vertical line.

4 Cable
Connect continuity tester to S1 + S2 or to S1 + S3.
If the auxiliary switch should switch in the opposite direction, rotate the auxiliary switch by 180°.

Dimensions [mm]

Spindle length

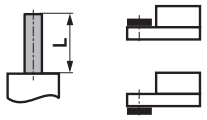	Min. 48
	Min. 20

Clamping range

	10...20	≥10	≤20
CrNi (INOX)	12...20	≥10	≤20

With utilisation of a round spindle made of CrNi (INOX): Ø 12...20 mm
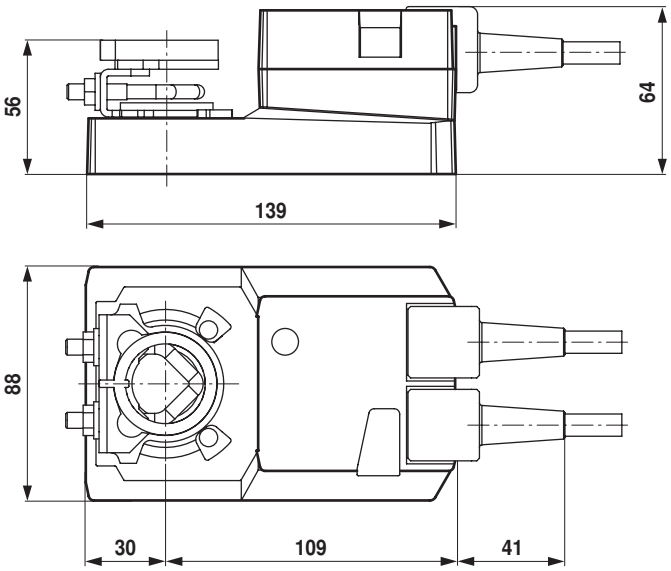
Dimensional drawings